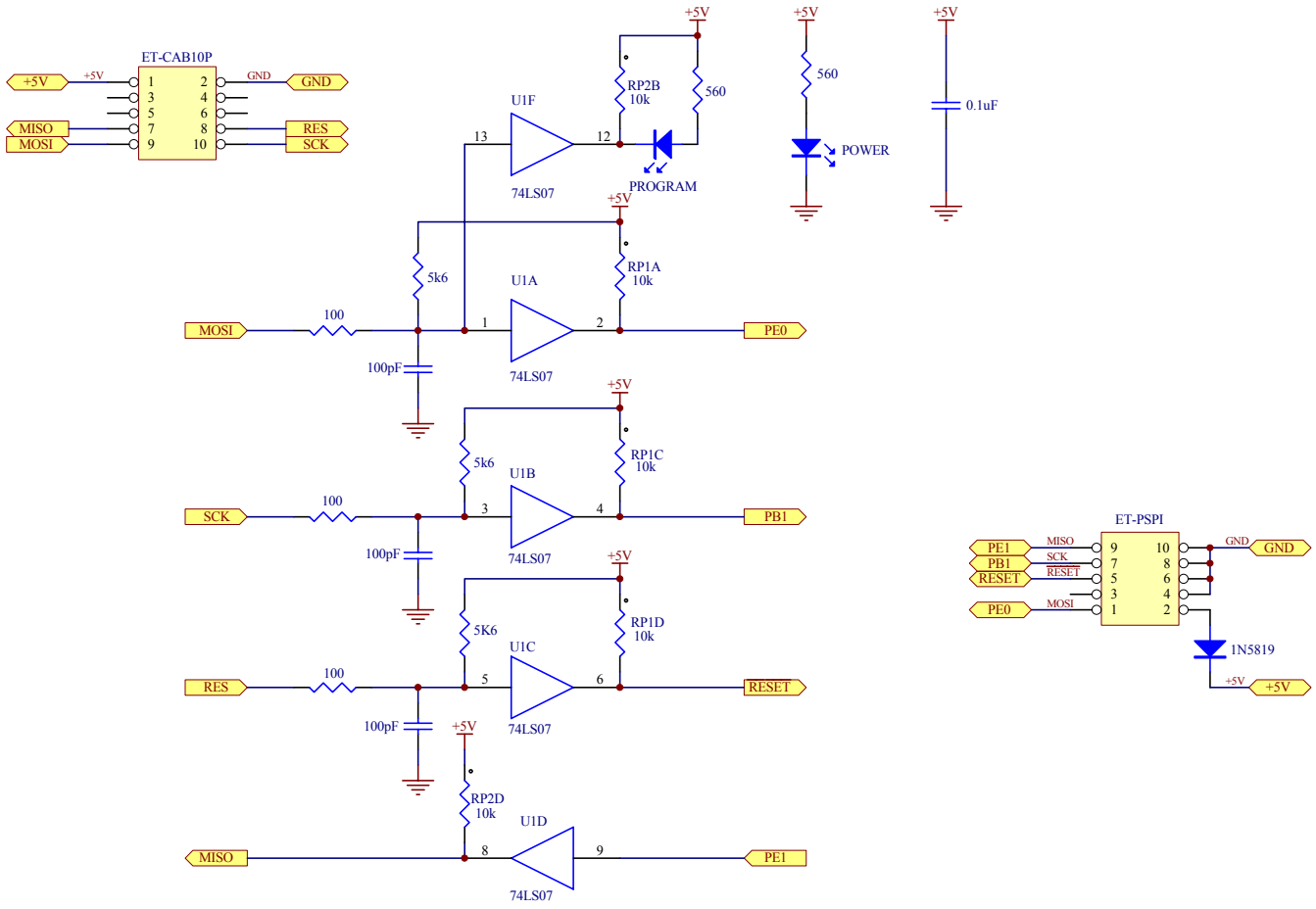

Title: ET-AVR ISP		
Size: A4	Number: ETT CO.,LTD. (WWW.ETT.CO.TH)	Revision: Rev 0
Date: 28-Dec-2005		Sheet of
File: D:\Protel\ATMEGA64_Stamp.Ddb		Drawn By: Adisak Choochan